electronics

5106

HART® transparent repeater

No. 5106V103-UK
From ser. no. 030459198

ATEX

c UL us
LISTED

DK ▶ PR electronics A/S tilbyder et bredt program af analoge og digitale signalbehandlingsmoduler til industriel automation. Programmet består af Isolatorer, Displays, Ex-barrierer, Temperaturtransmittere, Universaltransmittere mfl. Vi har modulerne, du kan stole på i selv barske miljøer med elektrisk støj, vibrationer og temperaturudsving, og alle produkter opfylder de strengeste internationale standarder. Vores motto »Signals the Best« er indbegrebet af denne filosofi – og din garanti for kvalitet.

UK ▶ PR electronics A/S offers a wide range of analog and digital signal conditioning devices for industrial automation. The product range includes Isolators, Displays, Ex Interfaces, Temperature Transmitters, and Universal Modules. You can trust our products in the most extreme environments with electrical noise, vibrations and temperature fluctuations, and all products comply with the most exacting international standards. »Signals the Best« is the epitome of our philosophy – and your guarantee for quality.

FR ▶ PR electronics A/S offre une large gamme de produits pour le traitement des signaux analogiques et numériques dans tous les domaines industriels. La gamme de produits s'étend des transmetteurs de température aux afficheurs, des isolateurs aux interfaces SI, jusqu'aux modules universels. Vous pouvez compter sur nos produits même dans les conditions d'utilisation sévères, p.ex. bruit électrique, vibrations et fluctuations de température. Tous nos produits sont conformes aux normes internationales les plus strictes. Notre devise »SIGNALS the BEST« c'est notre ligne de conduite - et pour vous l'assurance de la meilleure qualité.

DE ▶ PR electronics A/S verfügt über ein breites Produktprogramm an analogen und digitalen Signalverarbeitungsgeräte für die industrielle Automatisierung. Dieses Programm umfasst Displays, Temperaturtransmitter, Ex- und galvanische Signaltrenner, und Universalgeräte. Sie können unsere Geräte auch unter extremen Einsatzbedingungen wie elektrisches Rauschen, Erschütterungen und Temperaturschwingungen vertrauen, und alle Produkte von PR electronics werden in Übereinstimmung mit den strengsten internationalen Normen produziert. »Signals the Best« ist Ihre Garantie für Qualität!

HART® TRANSPARENT REPEATER

PRetrans 5106

Table of contents

Warning 2
Symbol identification 3
Safety instructions 3
How to demount system 5000 5
Application 6
Technical characteristics 6
Mounting / installation 6
Applications 7
Order: 5106 8
Electrical specifications 8
Connections 11
Block diagram 12
Control Drawing 5106QU01 14

GENERAL

WARNING

This device is designed for connection to hazardous electric voltages.
Ignoring this warning can result in severe personal injury or mechanical damage.
To avoid the risk of electric shock and fire, the safety instructions of this manual must be observed and the guidelines followed.
The specifications must not be exceeded, and the device must only be applied as described in the following.
Prior to the commissioning of the device, this manual must be examined carefully.
Only qualified personnel (technicians) should install this device.
If the equipment is used in a manner not specified by the manufacturer, the protection provided by the equipment may be impaired.

HAZARDOUS VOLTAGE

WARNING

Until the device is fixed, do not connect hazardous voltages to the device.
The following operations should only be carried out on a disconnected device and under ESD safe conditions:

- Dismantlement of the device for setting of DIP-switches and jumpers.
- General mounting, connection and disconnection of wires.
- Troubleshooting the device.

Repair of the device and replacement of circuit breakers must be done by PR electronics A/S only.

INSTAL-LATION

WARNING

SYSTEM 5000 must be mounted on DIN rail according to DIN 46277.
The communication connector of SYSTEM 5000 is connected to the input terminals on which dangerous voltages can occur, and it must only be connected to the programming unit Loop Link by way of the enclosed cable.

SYMBOL IDENTIFICATION

Triangle with an exclamation mark: Warning / demand. Potentially lethal situations.

The CE mark proves the compliance of the device with the essential requirements of the directives.

The double insulation symbol shows that the device is protected by double or reinforced insulation.

Ex devices have been approved for use in connection with installations in explosive areas.

SAFETY INSTRUCTIONS

DEFINITIONS

Hazardous voltages have been defined as the ranges: 75 to 1500 Volt DC, and 50 to 1000 Volt AC.
Technicians are qualified persons educated or trained to mount, operate, and also troubleshoot technically correct and in accordance with safety regulations.
Operators, being familiar with the contents of this manual, adjust and operate the knobs or potentiometers during normal operation.

RECEIPT AND UNPACKING

Unpack the device without damaging it. The packing should always follow the device until this has been permanently mounted. Check at the receipt of the device whether the type corresponds to the one ordered.

ENVIRONMENT

Avoid direct sunlight, dust, high temperatures, mechanical vibrations and shock, as well as rain and heavy moisture. If necessary, heating in excess of the stated limits for ambient temperatures should be avoided by way of ventilation.
All devices fall under Installation Category II, Pollution Degree 1, and Insulation Class II.

MOUNTING

Only technicians who are familiar with the technical terms, warnings, and instructions in the manual and who are able to follow these should connect the device.

Should there be any doubt as to the correct handling of the device, please contact your local distributor or, alternatively,

PR electronics A/S
www.prelectronics.com

Mounting and connection of the device should comply with national legislation for mounting of electric materials, i.e. wire cross section, protective fuse, and location. Descriptions of input / output and supply connections are shown in the block diagram and side label.
The following apply to fixed hazardous voltages-connected devices:

The max. size of the protective fuse is 10 A and, together with a power switch, it should be easily accessible and close to the device. The power switch should be marked with a label telling it will switch off the voltage to the device.

Year of manufacture can be taken from the first two digits in the serial number.

CALIBRATION AND ADJUSTMENT

During calibration and adjustment, the measuring and connection of external voltages must be carried out according to the specifications of this manual. The technician must use tools and instruments that are safe to use.

NORMAL OPERATION

Operators are only allowed to adjust and operate devices that are safely fixed in panels, etc., thus avoiding the danger of personal injury and damage. This means there is no electrical shock hazard, and the device is easily accessible.

CLEANING

When disconnected, the device may be cleaned with a cloth moistened with distilled water.

LIABILITY

To the extent the instructions in this manual are not strictly observed, the customer cannot advance a demand against PR electronics A/S that would otherwise exist according to the concluded sales agreement.

HOW TO DEMOUNT SYSTEM 5000

First, remember to demount the connectors with hazardous voltages.

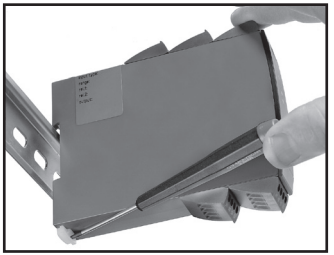

Picture 1:
By lifting the bottom lock, the device is detached from the DIN rail.

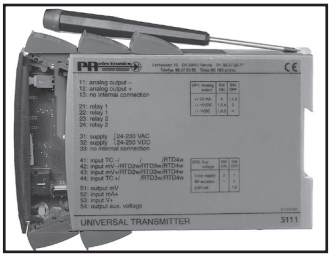

Picture 2:
Then, by lifting the upper lock and pulling the front plate simultaneously, the PCB is removed. Switches and jumpers can now be adjusted.

HART® TRANSPARENT REPEATER
PRetrans 5106

- *3- / 5-port 3.75 kVAC galvanic isolation*
- *Low response time*
- *2-wire supply > 17 V*
- *1- or 2-channel version*
- *Universal AC or DC supply*

Application

- Power supply and signal isolator with 2-way HART® communication for 2-wire transmitters.
- Signal isolator with 2-way HART® communication for supplied current transmitters.
- Signal isolator with low response time on analogue current signals.

Technical characteristics

- PR5106 primarily processes current signals of 4...20 mA.
- PR5106 is based on microprocessor technology for gain and offset. The analogue signal is transmitted at a response time of less than 25 ms.
- Inputs, outputs, and supply are floating and galvanically separated.
- The output can be connected either as an active current transmitter or as a 2-wire transmitter.

Mounting / installation

- Mounted vertically or horizontally on a DIN rail. As the devices can be mounted without distance between neighbouring units, up to 84 channels can be mounted per metre.
- PR5106B is recommended as Ex safety barrier for 5335D and 6335D.

APPLICATIONS

2-wire transmitter

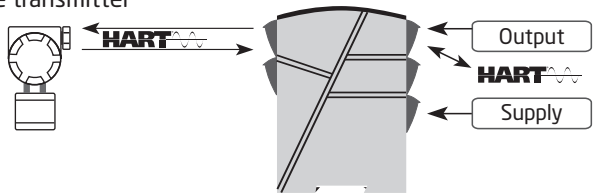

Current, mA

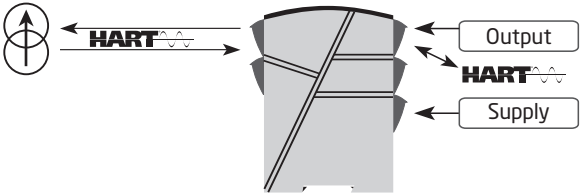

Order: 5106

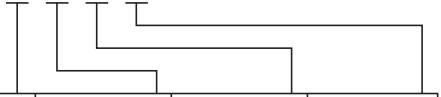

Type	Version	Input	Output	Channels
5106	Standard : A [EEx ia] II C : B	4...20 mA : B	4...20 mA : 2 20...4 mA : 9	Single : A Double : B

Electrical specifications

Specifications range:
-20 to +60°C
Common specifications:

Supply voltage universal	21.6...253 VAC, 50...60 Hz or 19.2...300 VDC
Internal consumption	≤ 2 W (2 channels)
Max. consumption	≤ 3 W (2 channels)
Fuse	400 mA SB / 250 VAC
Isolation voltage, test / operation	3.75 kVAC / 250 VAC
Signal / noise ratio	Min. 60 dB (0...100 kHz)
Response time (0...90%, 100...10%)	< 25 ms
Calibration temperature	20...28°C
Effect of supply voltage change (24...250 V)	< ±10 µA

Accuracy, the greater of general and basic values:

General values		
Input type	Absolute accuracy	Temperature coefficient
mA	≤ ±0.1% of span	≤ ±0.01% of span / °C

Basic values		
Input type	Basic accuracy	Temperature coefficient
mA	≤ ±16 µA	≤ ±1.6 µA/°C

EMC immunity influence	< ±0.5% of span
Extended EMC immunity:	
NAMUR NE 21, A criterion, burst	< ±1% of span

Auxiliary supply:	
2-wire supply (pin 44...42 & 54...52)	25...17 VDC / 0...20 mA
Max. wire size	1 x 2.5 mm^2 stranded wire
Screw terminal torsion	0.5 Nm
Relative humidity	< 95% RH (non-cond.)
Dimensions (HxWxD)	109 x 23.5 x 130 mm
DIN rail type	DIN 46277
Protection degree	IP20
Weight	246 g

Current input:

Measurement range	4...20 mA
Min. measurement range (span)	16 mA
Input resistance:	
Supplied unit	Nom. 10 Ω
Non-supplied unit	$R_{shunt} = \infty$, V_{drop} < 4 V

Current output and 2-wire 4...20 mA output:

Signal range (span)	4...20 mA
Min. signal range (span)	16 mA
Load (max.)	20 mA / 600 Ω / 12 VDC
Load stability	≤ 0.01% of span / 100 Ω
Current limit	≤ 28 mA
Ripple on HART® communication	< 3 mVRMS
Max. external 2-wire supply	29 VDC
Effect of external 2-wire supply voltage change	< 0.005% of span / V

EEx / I.S. approval - 5106B:

DEMKO 00ATEX127483	⟨Ex⟩ II (1) GD [EEx ia] IIC
Applicable for	Zone 0, 1, 2, 20, 21 or 22
UL	IS, Cl. I, Div. 1, Group A, B, C, D IS, Cl. I, zone 0 and 1, Group IIC IS, Cl. II, Div. 1, Group E, F,G
UL control drawing no.	5106QU01

Ex / I.S. data:

Terminal 31...33

U_m ..... : 250 V

Terminal 44 to 42, 41 (54 to 52, 51)

U_o ..... : 28 VDC

I_o ..... : 91 mADC

P_o ..... : 0.65 W

L_o ..... : 3.0 mH

C_o ..... : 80 nF

Terminal 41 to 42 (51 to 52)

U_o ..... : 10 VDC

I_o ..... : 2 mADC

P_o ..... : 5 mW

L_o ..... : 1 H

C_o ..... : 3 µF

GOST R approval:

VNIIM & VNIIFTRI, Cert. no. ..... See www.prelectronics.com

Observed authority requirements:	**Standard:**
EMC 2004/108/EC	EN 61326-1
LVD 2006/95/EC	EN 61010-1
PELV/SELV	IEC 364-4-41 and EN 60742
ATEX 94/9/EC	EN 50014, EN 50020 and EN 50281-1-1
UL	UL 913, UL 508

Of span = of the presently selected range

CONNECTIONS

Connections:

Supply:

Connections are identical for channel 1 and channel 2.

Inputs:

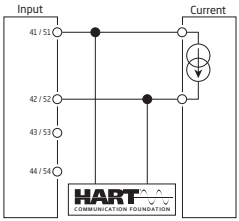

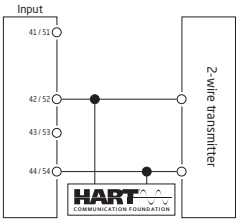

Outputs:

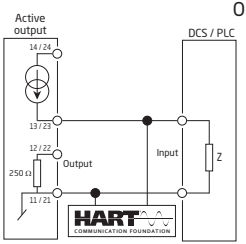

If the input impedance Z is 250 Ω or higher

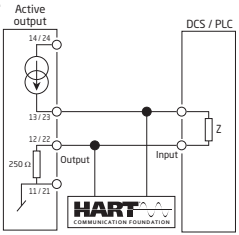

If the input impedance Z is < 250 Ω

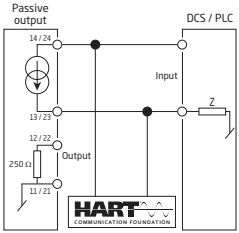

If the input impedance Z is 250 Ω or higher

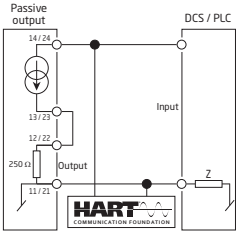

If the input impedance Z is < 250 Ω

BLOCK DIAGRAM

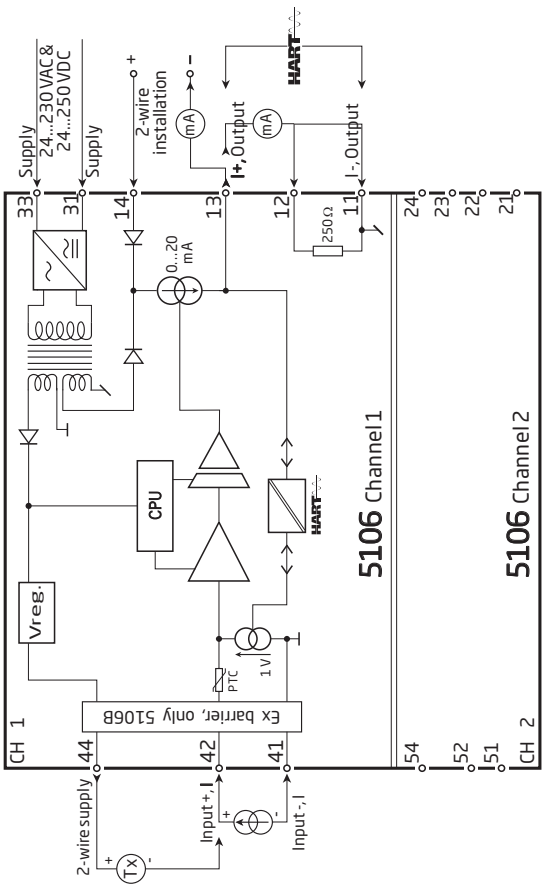

APPENDIX

Control Drawing 5106QU01

CONTROL DRAWING 5106QU01

Hazardous (Classified) Location

Class I, Division 1, Group A,B,C,D
Class I , Zone 0 and 1, Group IIC
Class II, Division 1 Group E, F, G

Nonhazardous

Associated apparatus
Galvanically Isolated

Intrinsically safe apparatus entity parameters:

Vmax. (Ui) ≥ Vt (Uo)
Imax. (Ii) ≥ It (Io)
Pi ≥ Po
Ca ≥ C_{cable} + Ci
La ≥ L_{cable} + Li

The sum of capacitance and inductance of cable and intrinsic safe equipment must be less or equal to Ca and La

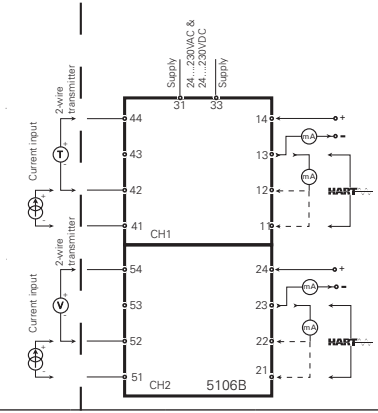

5106B Associated apparatus parameters				
CH1	Terminals 44 to 41,42			Terminals 41 to 42
CH2	Terminals 54 to 51,52			Terminals 51 to 52
Vt (Uo)	28 V			10V
It (Io)	93 mA			2 mA
Po	0.65 W			5 mW
	IIC / grp. A, B	IIB / grp. C	IIA / grp.D	IIC / grp. A, B
Ca (Co)	0.06 µF	0.52 µF	1.72 µF	3.0 µF
La (Lo)	2.4 mH	12 mH	20 mH	1.0 H

Installation notes:

1) The maximum nonhazardous location voltage is 250VAC/DC.
2) The installation shall be in accordance with the National Electrical Code NFPA 70, Articles 504 and 505.
3) The terminals of the two individual channels shall not be interconnected in any way.
4) Install in Pollution degree 2 or better
5) Use 60 / 75 °C copper conductors with wire size AWG: (26 - 14).
6) Warning: Substitution of components may impair intrinsic safety.

Displays Programmable displays with a wide selection of inputs and outputs for display of temperature, volume and weight, etc. Feature linearization, scaling, and difference measurement functions for programming via PReset software.

Ex interfaces Interfaces for analog and digital signals as well as HART® signals between sensors / I/P converters / frequency signals and control systems in Ex zone 0, 1 & 2 and for some devices in zone 20, 21 & 22.

Isolation Galvanic isolators for analog and digital signals as well as HART® signals. A wide product range with both loop-powered and universal isolators featuring linearization, inversion, and scaling of output signals.

Temperature A wide selection of transmitters for DIN form B mounting and DIN rail devices with analog and digital bus communication ranging from application-specific to universal transmitters.

Universal PC or front programmable devices with universal options for input, output and supply. This range offers a number of advanced features such as process calibration, linearization and auto-diagnosis.

www.prelectronics.fr
sales-fr@prelectronics.com

www.prelectronics.de
sales-de@prelectronics.com

www.prelectronics.es
sales-es@prelectronics.com

www.prelectronics.it
sales-it@prelectronics.com

www.prelectronics.se
sales-se@prelectronics.com

www.prelectronics.co.uk
sales-uk@prelectronics.com

www.prelectronics.com
sales-us@prelectronics.com

www.prelectronics.cn
sales-cn@prelectronics.com

Head office

Denmark
PR electronics A/S
Lerbakken 10
DK-8410 Rønde

www.prelectronics.com
sales-dk@prelectronics.com
tel. +45 86 37 26 77
fax +45 86 37 30 85

DS CERTIFIED
QUALITY SYSTEM AND ENVIRONMENTAL MANAGEMENT SYSTEM
DS/EN ISO 9001
DS/EN ISO 14001
DANAK