Four-port Industrial USB 2.0 Hub

Model BB-UH104

B+B SmartWorx
Powered by ADVANTECH
www.advantech-bb.com

PRODUCT FEATURES

- Expands 1 USB port to 4 USB ports (USB 2.0)
- 15 kV ESD protection
- USB 2.0, 480 Mbps, high speed
- Wide operating temperature (-40 to +80 °C)
- Rugged panel mount case
- High retention USB connectors hold cables tight

USB Connectivity Where You Need It

Model BB-UH104 is a compact, industrial grade four port USB 2.0 hub. It has high retention USB connectors that work with standard USB cables to ensure a tight connection in high vibration applications – requiring up to 1.54 kg (3.4 lb) force to disconnect them. It provides true USB 2.0 data transmission through each port, even during heavy load applications. Model BB-UH104 is a plug-and-play device, meaning that there are no additional drivers to load.

Bus Power

The hub is powered entirely by your high power USB port, leaving your installation uncluttered by power cabling. As a bus powered device, it provides 100 mA of power to downstream peripherals which is adequate for most applications. *Important: check your device to be sure this power is adequate. If it needs more power, B+B SmartWorx has a variety of externally powered hubs to select from.*

Mount It Anywhere

The compact polycarbonate plastic enclosure comes equipped with mounting brackets to secure it to a panel, counter top or other flat surface. A standard USB cable is required to connect it to your PC.

Industrial Specifications

Industrial EMC specifications make this hub more robust than other office grade products.

ORDERING INFORMATION

MODEL NUMBER	DESCRIPTION
BB-UH104	4-port Industrial USB 2.0 Hub

USB cable required - sold separately.

ACCESSORIES - sold separately

BB-USBAMBM-3F - 0.9 m (3 ft) USB extension cable

All product specifications are subject to change without notice.

B+B SmartWorx Powered by ADVANTECH
orders@advantech-bb.com
support@advantech-bb.com
Corporate Headquarters: 707 Dayton Road, PO Box 1040 Ottawa, IL 61350 USA 815-433-5100 Fax 433-5104
European Office: Westlink Commercial Park, Oranmore Co. Galway Ireland +353 91 792444 Fax +353 91 792445

Four-port Industrial USB 2.0Hub

Model BB-UH104

SPECIFICATIONS

USB INTERFACE	
Standards	USB 2.0 (1.1 compatible)
Upstream Port	(1) Type B Female – High Retention
Downstream Port	(4) Type A Female – High Retention
Speed	480 Mbps on each port Multi-transaction Translator, 1 per port
ESD	15 kV Air, 8 kV Contact
High Retention	USB ports require 15 N - 3.4 lb (1.54 kg) force withdrawal force using standard USB cable
POWER	
Source	5 VDC from USB bus
Downstream Power	100 mA per port
MECHANICAL	
Dimensions	6.1 x 4.45 x 2.79 cm (2.4 x 1.75 x 1.10 in)
Enclosure	IP 30, Polycarbonate Plastic
Weight	49.90 g (0.11 lb)
MTBF	552747 Hours
MTBF Calc. Method	MIL 217F Parts Count Reliability

ENVIRONMENTAL	
Operating Temperature	-40 to +80 °C (-40 to +176 °F)
Storage Temperature	-40 to +85 °C (-40 to +185 °F)
Operating Humidity	0 to 95% Non-condensing
APPROVALS, DIRECTIVES, STANDARDS	
FCC, CE	
CE Directives	2014/30/EU - Electromagnetic Compatibility Directive 2011/65/EU - Reduction of Hazardous Substances Directive (RoHS) 2012/19/EU - Waste Electrical and Electronic Equipment (WEEE)
CE Standards	**EMC:** EN 55032: Class B - Information Technology Equipment - RF Emissions EN 55024 - Information Technology Equipment - Immunity Characteristics - Limits and Methods of Measurements EN 61000-6-1 - Generic Immunity Standard for Residential, Commercial and Light-Industrial Environments

MECHANICAL DIAGRAM
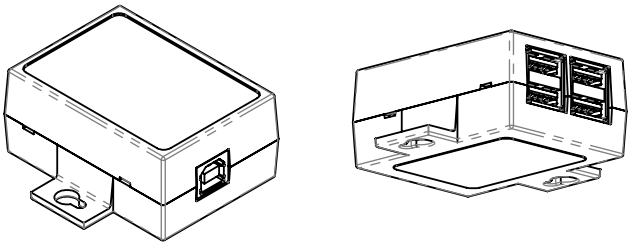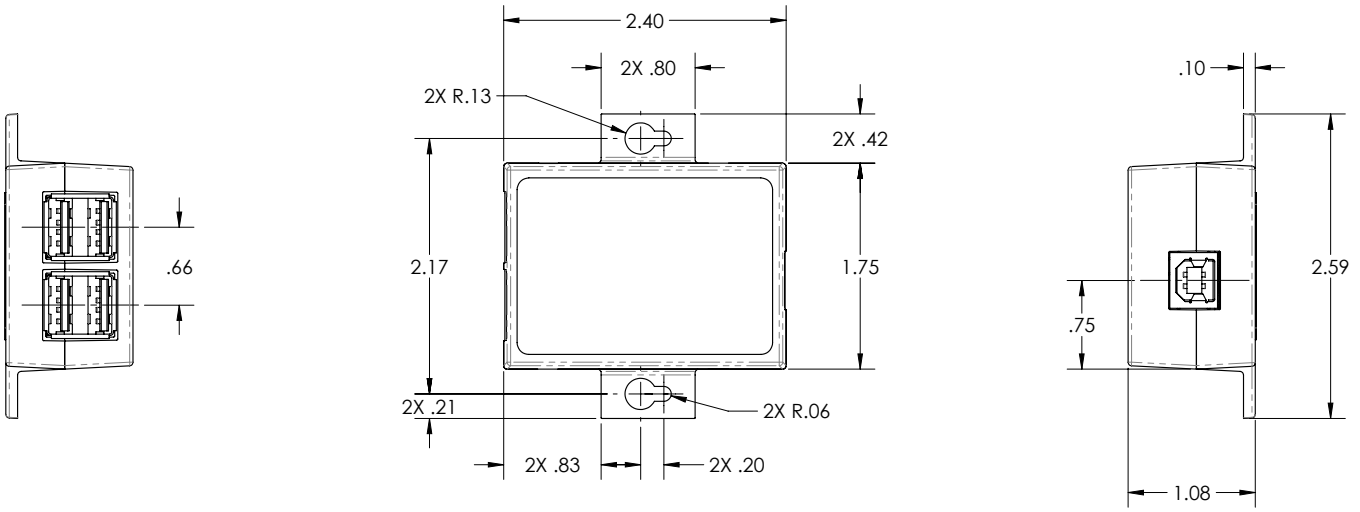
Dimensions = inches